CODE:

PTA-T-1PH-050-LP

Contact-less direct and alternating TRMS current transducer

DIMENSIONS:	41 x 44 x 26 mm
WEIGHT:	47g
CASE:	Material PA6, Red color
MOUNTING:	Free Standing or on IEC EN60715 DIN rail with two accessories included

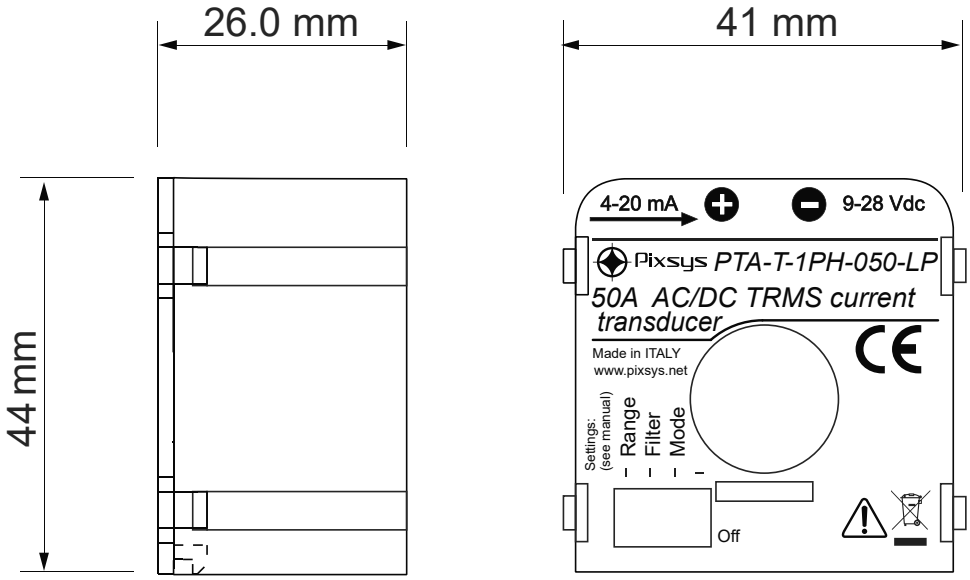

MOUNTING

The device can be located in any position and place, in accordance with the operating conditions above stated. Use the included hooking bracket when fixing to a DIN rail.

WARNING: High-strength magnetic fields may change the output value; let avoid closeness to permanent magnets, electromagnets or iron bulks that cause such a modification of the surrounding magnetic field; try a different arrangement or orientation if zero error was greater than expected.

Multi-turn primary winding to improve sensibility

You can increase the sensibility of the device simply passing several times in the hole with the measuring current, realizing turns with multiplictive effect. For example, passing 5 times in the hole, as to see 4 turns, choosing a 50 A range, you get an equivalent sensibility of 10 A full-scale. When you make this, let dispose the turns with symmetry in order to preserve accuracy: use diametric contraposition with 2 turns, cross disposition with 4 turns, with 6 turns at 60° and so on.

1 accessory, included, for DIN rail mounting

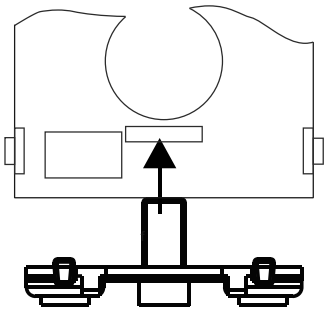

Pixsys srl
Via Po, 16
30030 - Mellaredo di Pianiga
Venezia - Italia
Tel. +39 041 5190518
Fax +39 041 519002
Mail info@pixsys.net
www.pixsys.net

Document version: 2300.10.416
Last update: 10/10/2026
Author: Matteo Cardi

GENERAL SPECIFICATIONS	OPERATING CONDITIONS	
• Direct and alternating current transducer galvanically insulated from the measuring circuit • Measurement principle: Hall Effect • Possibility to measure the direct and alternating component of TRMS current • No shunt, no wasted power of primary current circuit and no dissipation. • Unipolar or bipolar measurement. • High measurement accuracy. • Two DIP-Switches selectable ranges. • Damping filter availability to improve stable reading. • Suitable for batteries, battery chargers, solar panels, power units and generic dc loads. • Compact dimensions: 41 x 44 x 26 mm.	Protection degree Operating temperature Storage Temperature Humidity Altitude **CASE** Weight Overall dimensions Box material STANDARDS	IP20. -20..+70 °C. -40..+85 °C. 10..90 % non-condensing. up to 2000m a.s.l with bare conductor up to 3500m a.s.l. with insulated conductor 47 g. 41 x 44 x 26 mm (without terminals) PA6, red color EN61326 (EMC requirements) EN61010-1 (safety)

TECHNICAL SPECIFICATIONS		
INPUT		
Measure type	AC / DC TRMS or Bipolar DC.	
Range	0..50A or 0..25A TRMS; -50..+50A or -25..+25A Bipolar (selectable by dip-switch.).	
Peak factor	1,3	
Bandwidth	1kHz	
Insulation	When a sheathed wire is used, the insulation voltage is set by sheath properties. On a bare wire, it's stated to 3 kV.	
Over-current	300 A permanent.	
OUTPUT AND POWER SUPPLY		
Type	4..20 mA, max. load R =600 Ω. Screw terminals: + and -.	
Terminals	Screw terminal pitch 5.08mm for max 2.5 mm2 cables.	
Hole diameter	20.8 mm	
Power supply	9..28 Vdc (between + and -)	
Protections	Polarity reversal - Over-Voltage	
Fail indication	< 3.8 mA	
Max. indication	< 22 mA	
PRECISION	∿	⎓
Over the 2% of End of Scale	0.5% of end scale.	1% of end scale.
Under the 2% of End of Scale	1% of end scale.	2% of end scale.
Resolution Output:	10 bit (1000 points) Input: 12 bit (4000 points).	
Temperature coefficient	< 200 ppm/°C.	
Error due to EMI	< 1%	
Response time	Fast filter: 500 ms. - Slow filter: 1000 ms.	
Measure hysteresis	0.3% of the end scale (typical)	
OVERVOLTAGE CATEGORY		
Bare conductor	CAT. III 300V	
Insulated conductor	CAT. III 600V	

DIP switches

The device can be configured using DIP switches.
The device is set to a 500 ms filter setting and TRMS mode as default.

POS.	DIP1 - RANGE	DIP2 - Filter(10%-90%)	DIP3 - Mode	DIP4 -Unused
OFF	0-50A	filter 500ms	TRMS	must be OFF
ON	0-25A	filter 1000ms	Bipolar	must be OFF

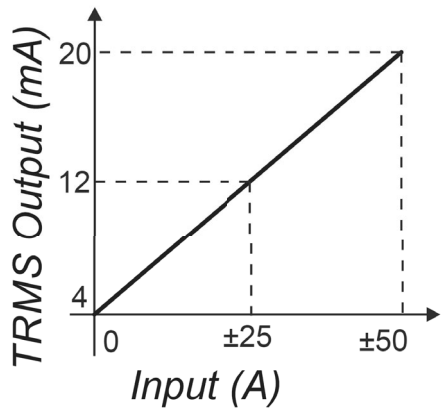

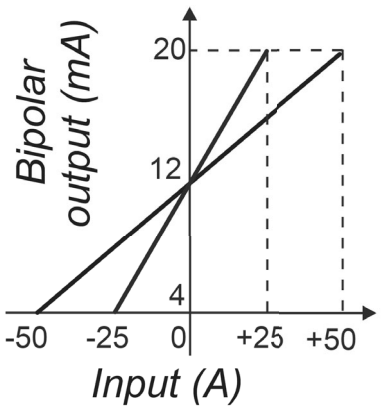

Disposal of electrical & electronic equipment (applicable throughout the EU and other countries with separate collection programs).
This symbol, found on your product or on its packaging, indicates that this product should not be treated as household waste when you wish to dispose of it. Instead,it should be handed over to an applicable collection point for the recycling of electrical and electronic equipment.
By ensuring this product is disposed of correctly, you will help prevent potential negative consequences to the environment and human health, which could otherwise be caused by inappropriate disposal of it. The recycling of materials will help to conserve natural resources.
For more detailed information about the recycling of this product, please contact your local city office, waste disposal service or the retail store where you purchased this product.